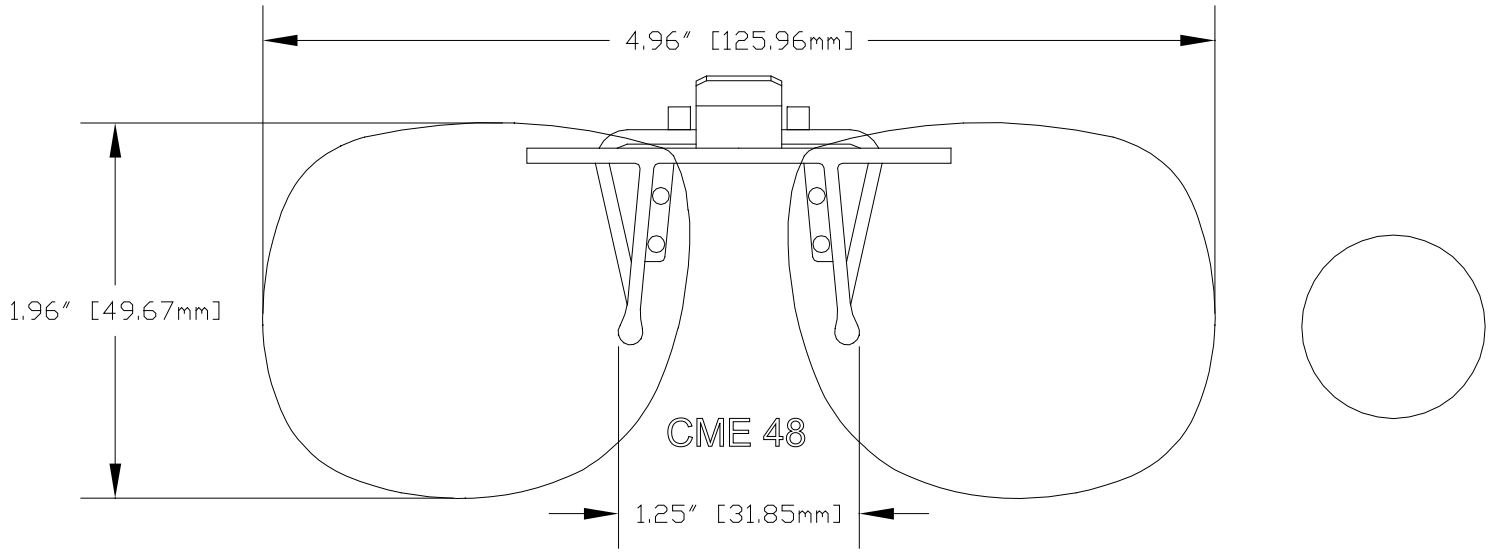
4.96″ [125.96mm]
1.96″ [49.67mm]
CME 48
1.25″ [31.85mm]

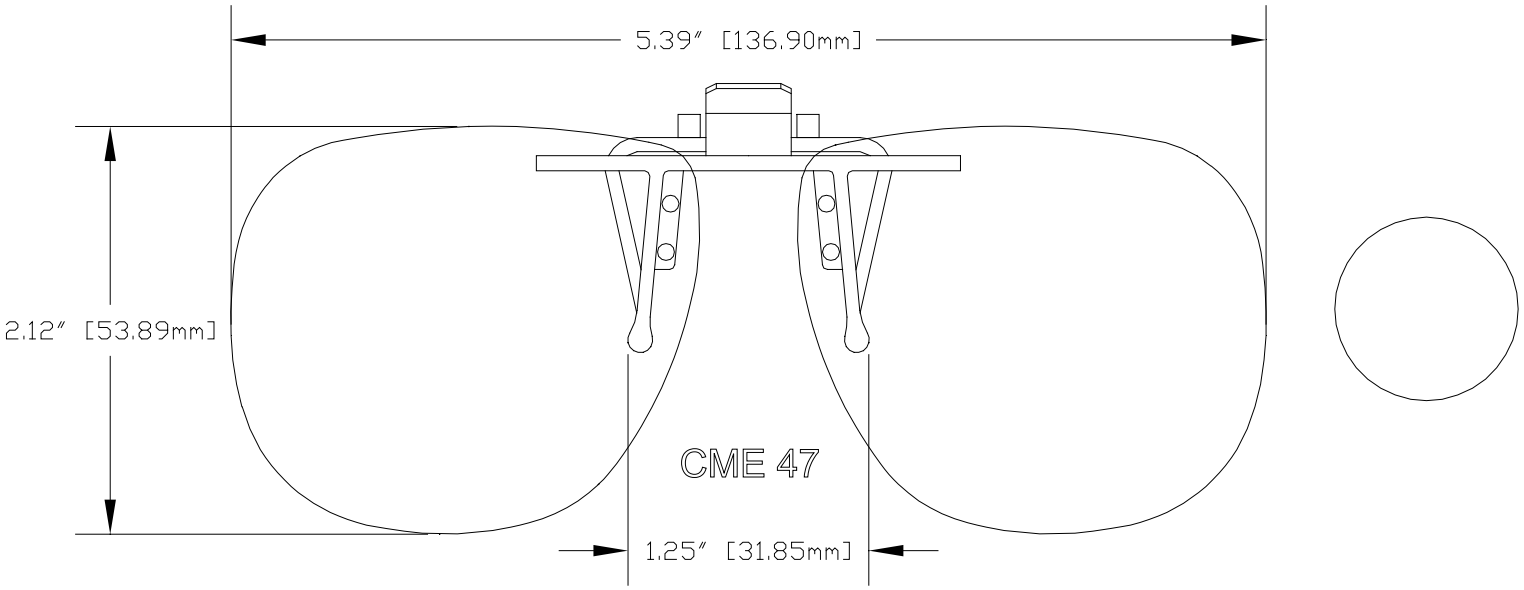
5.39″ [136.90mm]
2.12″ [53.89mm]
CME 47
1.25″ [31.85mm]